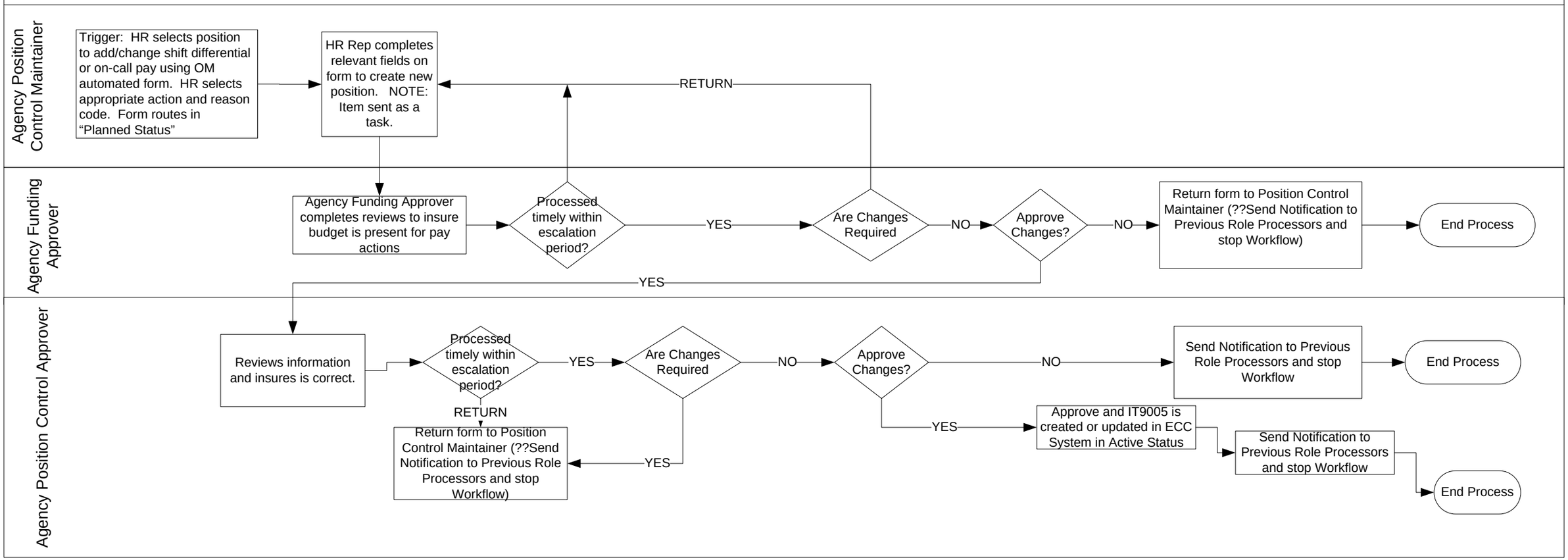SAMPLE WORKFLOW DRAFT Form F019.6 _Pay_Related_Actions_Routing_Form